Mechanical Seal Specification

Determine the best sealing solution for your applications.

Elastomer O-Ring Seals

DS-400B

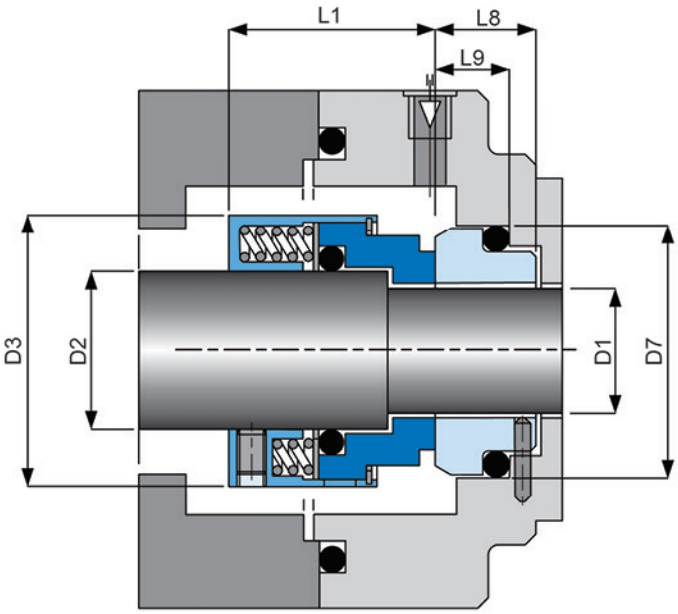

Applications

- General and high pressure sealing duties, chemical, including processing, refinery and petrochemical plants.
- Oils, solvents, refrigerants, water and food processing, and other demanding applications.

Standard Materials

- Metal Parts : SUS 316
- Spring : SUS 316
- Rotary Face : Silicon Carbide/Tungsten Carbide/ Carbon
- Stationary Face : Silicon Carbide/ Tungsten Carbide/Carbon
- Secondary Seals : Fluoroelastomer/Nitrile/ Ethylene Propelene/PTFE

*(Other configuration of materials also available on request)

Operating Conditions

- Max. Operating Pressure : 40 kg/cm^2 *
- Temperature Range : -15 to 200 *
- Max. Rubbing Speed : 15 m/s

*(Depend on combination of materials)

Design Features/Benefits

- Multiple springs exert even closing force on seal faces. Ensure even loading of seal face and compensates for acceptable shaft misalignment.
- Versatile design using components common to other O-ring and wedge type seals. Allow easy repair, reduced spares holding, and simple conversation to balanced/unbalanced or wedge seal.
- Setting-length of spring can be held in position by build in set-ring.

Thai Industrial Business Company Limited
Tel. : +66 (0) 2 102 0896
Fax : +66 (0) 2 102-0897
E-mail : sales@tib-group.com

www.tib-group.com

Copyright © Thai Industrial Business Co.,Ltd. All rights reserved.

Mechanical Seal Specification

Determine the best sealing solution for your applications.

Dimensional Data (mm.)

Seal size (D1) (mm.)	D2	D3	D7	L1	L8	L9
14	18	32	33.0	30.5	19.5	11.5
16	20	34	35.0	30.5	19.5	11.5
18	22	36	37.0	31.5	19.5	11.5
20	24	38	39.0	31.5	19.5	11.5
22	26	40	40.0	31.5	19.5	11.5
24	28	42	43.0	34.2	19.5	11.5
25	30	44	45.0	34.5	19.5	11.5
28	33	47	48.0	37.5	19.5	11.5
30	35	49	50.0	38.0	19.5	11.5
32	38	54	56.0	38.0	22.0	14.0
33	38	54	56.0	38.0	22.0	14.0
35	40	56	58.0	38.0	22.0	14.0
38	43	59	61.0	39.5	22.0	14.0
40	45	61	63.0	39.5	22.0	14.0
43	48	64	66.0	39.5	22.0	14.0
45	50	66	70.0	39.5	23.0	15.0
48	53	69	73.0	39.5	23.0	15.0
50	55	71	75.0	44.0	23.0	15.0
53	58	78	78.0	44.0	23.0	15.0
55	60	80	80.0	44.0	23.0	15.0
58	63	83	83.0	49.0	23.0	15.0
60	65	85	85.0	49.0	23.0	15.0
63	68	88	90.0	49.0	26.0	18.0
65	70	90	92.0	49.0	26.0	18.0
70	75	95	97.0	55.5	26.0	18.0
75	80	104	105.0	55.5	26.2	18.2
80	85	109	110.0	50.0	26.2	18.2
85	90	114	115.0	60.0	26.2	18.2
90	95	119	120.0	60.0	25.2	17.2
95	100	124	125.0	60.0	25.2	17.2
100	105	129	134.3	60.0	30.0	20.0

* Other sizes are available upon request.

Thai Industrial Business Company Limited
Tel. : +66 (0) 2 102 0896
Fax : +66 (0) 2 102-0897
E-mail : sales@tib-group.com

Copyright © Thai Industrial Business Co.,Ltd. All rights reserved.